EANCOM® 2002 S4

RECADV

Receiving advice message

Edition 2016 Upd. 2021

1. Introduction 2
2. Message Structure Chart 6
3. Branching Diagram 7
4. Segments Description 12
5. Segments Layout 16
6. Example(s) 63

1. Introduction

Status

MESSAGE TYPE	: RECADV
REFERENCE DIRECTORY	: D.01B
EANCOM® SUBSET VERSION	: 009

Definition

The Receiving Advice message addresses the business needs related to the receipt of goods. It is used either:

- to confirm reception of goods
- in conjunction with the Despatch Advice message to confirm receipt or to advise discrepancies following the reception of goods and/or the controlled contents of a despatch which has been accepted (the waybill is signed).
- to inform about discrepancies between goods received and goods ordered/planned.

Principles

The message relates to one consignor and one consignee and is initiated by the party who has received the goods and/or services according to agreed conditions.

The message relates to a single despatch point and a single receiving point. It may cover a number of different items or packages.

It allows the buyer or recipient of goods to provide the supplier or respective agent with;

- a confirmation of the receipt of goods
- a notification on discrepancies between the number of items RECEIVED AND ACCEPTED and the number of items despatched (and/or ordered)
- a notification or instruction concerning the acceptance or suggested actions for the identified discrepancies.
- an instruction for corrections to be undertaken on the invoice or credit notes to be issued which are based on the despatch advice or despatch note. The receiver of goods may also correct internal invoice(s) for goods which are eventually passed on to the final customer.

The Receiving Advice should always be sent by the buyer to the supplier or their respective agents after the goods are physically received and inspected.

The message should be sent within a commercially agreed time period e.g. 24 hours after receipt of goods. This makes it possible for the supplier to check the data of the despatch, adjust the invoice or issue a credit note, control internal procedures, count stock etc.

Scenarios for the Receiving Advice Message

Any number of business needs and actions affecting the whole production/ordering, delivery and invoicing cycle can arise as a result of the actual delivery of goods.

Discrepancies between goods received and accepted, and goods expected to be delivered might lead to adjustments of delivery schedules, orders, invoices, etc. These actions may be covered by the Receiving Advice, other EDI messages and via other communication channels.

Trading partners should review their business procedures and identify those functions and actions which may be covered by the Receiving Advice message. Scenarios covered by the Receiving Advice message can range from simple to complex, determining the ease and degree of automation.

Simple Scenario

1. Introduction

Within a simple scenario, the Receiving Advice message is only used to confirm or advise discrepancies related to the Despatch Advice or note.

When only confirming or rejecting the reception and acceptance of goods, only the header section of the Receiving Advice message need be transmitted. Confirmation of reception might trigger invoicing for goods and services or may be used by the supplier to control the performance of contracted transportation services.

Within a simple scenario, the Receiving Advice is only used to notify discrepancies between goods received and accepted and goods despatched as communicated in the Despatch Advice. In these cases, the Receiving Advice will usually involve information related to goods lost, stolen or damaged in transit, short or excess shipments, unknown items, etc.

Any adjustments to delivery schedules or purchase orders will have been dealt with beforehand or will be handled through other EDI messages or by other communication channels.

Actions to be taken related to any discrepancies may be agreed beforehand and can be specified in the interchange agreement.

Complex Scenario

The functionalities covered by the Receiving Advice within a more complex scenario may include those described above as part of the simple scenario and in addition, information or instructions which might alter an existing delivery schedule, outstanding order, invoice, etc.

Within a more complex scenario the Receiving Advice message might notify discrepancies for both despatched and received and accepted quantities AND despatched and ordered or planned quantities, e.g. a Receiving Advice could change the status of a line item on backorder by requesting a new delivery date, cancelling the item, etc.

Within a more complex scenario, suggested actions or instructions relevant to delivery discrepancies may vary depending on stock situation, sales forecasting, etc.

Structure of the Receiving Advice Message

The EANCOM® Receiving Advice detail section contains two distinct structures.

1. CPS-PAC Segment Group Structure

The first is the CPS-PAC Segment Group structure which can be used to provide information at the shipping container level, (e.g. containers which have been damaged, serialised containers unknown at the reception point, etc.)

This group of segments allows for the provision of shipping container identification numbers. The function or meaning of the identification numbers transmitted in this part of the message should be bilaterally agreed by trading partners and described in the PCI and GIN segments at the CPS-PAC level.

2. CPS-LIN Segment Group Structure

The second option is CPS-LIN Segment Group structure which can be used to provide detailed receiving information for a particular item (see Receiving Details per Item below). The item may be contained within any given number of shipping containers which are part of the delivery.

Optionally, more specific receiving information for an item within a particular shipping container can be provided (see Receiving Details per Serial Shipping Container Code below). In these cases each shipping container is uniquely identified by an EAN.UCC Serial Shipping Container Code.

Receiving Details per Item

The LIN segment identifies the item and the QTY segment provides the total quantity for the item which has been received and accepted. The quantity in the QTY segment is the global quantity received and accepted and will relate to one or more shipping containers containing the item which are part of the delivery.

Discrepancies between the quantity received and accepted and other quantities (ordered/despatched) and actions to be taken are indicated in the QVR and DTM segments.

1. Introduction

No details per specific shipping container are provided in this approach.

Receiving Details per Serial Shipping Container Code (SSCC)

Additionally, receiving details per specific shipping container containing the item identified in LIN may be provided. In these cases, LIN will identify the item and the receiving details will be provided per shipping container using the segment group PCI-QTY-QVR-GIN.

The PCI-GIN segments are used to provide the Serial Shipping Container Code of the container containing the item identified in LIN (PCI-GIN). The QTY segment indicates the quantity received and accepted for the specific shipping container. The QVR segment provides information on quantity discrepancies and actions to be taken.

There will be as many PCI-QTY-QVR-GIN repetitions as there are shipping containers containing the item identified in LIN.

CPS-LIN Structure Examples:

A delivery consists of a three shipping containers identified by the SSCC's A, B and C. The shipping containers contain three different items: GTIN 1, GTIN 2, GTIN 3 in the following composition:

SSCC A contains 10 GTIN 1

SSCC B contains 10 GTIN 1, 15 GTIN 2 and 20 GTIN 3

SSCC C contains 15 GTIN 2 and 15 GTIN 3.

SHIPMENT DELIVERED:

SSCC - A	SSCC - B	SSCC - C
10 GTIN 1	10 GTIN 1 15 GTIN 2 20 GTIN 3	15 GTIN 2 15 GTIN 3

Receiving Details per Item

The Receiving Advice message may specify receiving details globally per item:

LIN 1	=	GTIN 1
QTY 1	=	20
LIN 2	=	GTIN 2
QTY 2	=	30
LIN 3	=	GTIN 3
QTY 3	=	35

Receiving Details per Shipping Container

The Receiving Advice message may specify receiving details globally per SSCC:

LIN 1	=	GTIN 1
PCI-GIN	=	SSCC A
QTY	=	10
PCI-GIN	=	SSCC B
QTY	=	10

1. Introduction

LIN 2	=	GTIN 2
PCI-GIN	=	SSCC B
QTY	=	15
PCI-GIN	=	SSCC C
QTY	=	15

LIN 3	=	GTIN 3
PCI-GIN	=	SSCC B
QTY	=	20
PCI-GIN	=	SSCC C
QTY	=	15

Note:
For simplicity, the above examples assume that all quantities despatched are received and accepted (no discrepancies). Under such conditions normally no Receiving Advice message would be sent or only the header section of the message would be sent to confirm reception.

2. Message Structure Chart

UNA		1	C	1	- Service string advice
UNB		2	M	1	- Interchange header
Receiving Advice Heading Section					
UNH		3	M	1	- Message header
BGM		4	M	1	- Beginning of message
DTM		5	M	10	- Date/time/period
ALI		6	C	5	- Additional information
FTX		7	C	99	- Free text
SG1			C	10	- RFF-DTM
RFF		8	M	1	- Reference
DTM		9	C	1	- Date/time/period
SG4			M	99	- NAD-SG5-SG6
NAD		10	M	1	- Name and address
SG5			C	10	- RFF
RFF		11	M	1	- Reference
SG6			C	10	- CTA-COM
CTA		12	M	1	- Contact information
COM		13	C	5	- Communication contact
SG10			C	10	- TDT
TDT		14	M	1	- Details of transport
SG11	+		C	9999	- EQD-SG13
EQD	+	15	M	1	- Equipment details
SG13	+		C	25	- SEL-CDI
SEL	+	16	M	1	- Seal number
CDI	+	17	M	10	- Physical or logical state
Receiving Advice Detail Section					
SG16			C	9999	- CPS-SG17-SG22
CPS		18	M	1	- Consignment packing sequence
SG17			C	9999	- PAC-QVR-SG18
PAC		19	M	1	- Package
QVR		20	C	1	- Quantity variances
SG18			C	999	- PCI-SG20
PCI		21	M	1	- Package identification
SG20			C	999	- GIN
GIN		22	M	1	- Goods identity number
SG22			C	9999	- LIN-PIA-IMD-QTY-QVR-DTM-FTX-SG28-SG29
LIN		23	M	1	- Line item
PIA		24	C	10	- Additional product id
IMD	+	25	C	25	- Item description
QTY		26	C	10	- Quantity
QVR		27	C	10	- Quantity variances
DTM		28	C	5	- Date/time/period
FTX		29	C	99	- Free text
SG28			C	10	- RFF-DTM
RFF		30	M	1	- Reference
DTM		31	C	1	- Date/time/period
SG29			C	9999	- PCI-QTY-QVR-SG31
PCI		32	M	1	- Package identification
QTY		33	C	1	- Quantity
QVR		34	C	1	- Quantity variances
SG31			C	10	- GIN
GIN		35	M	1	- Goods identity number
Receiving Advice Summary Section					
CNT		36	C	1	- Control total
UNT		37	M	1	- Message trailer
UNZ		38	M	1	- Interchange trailer

3. Branching Diagram

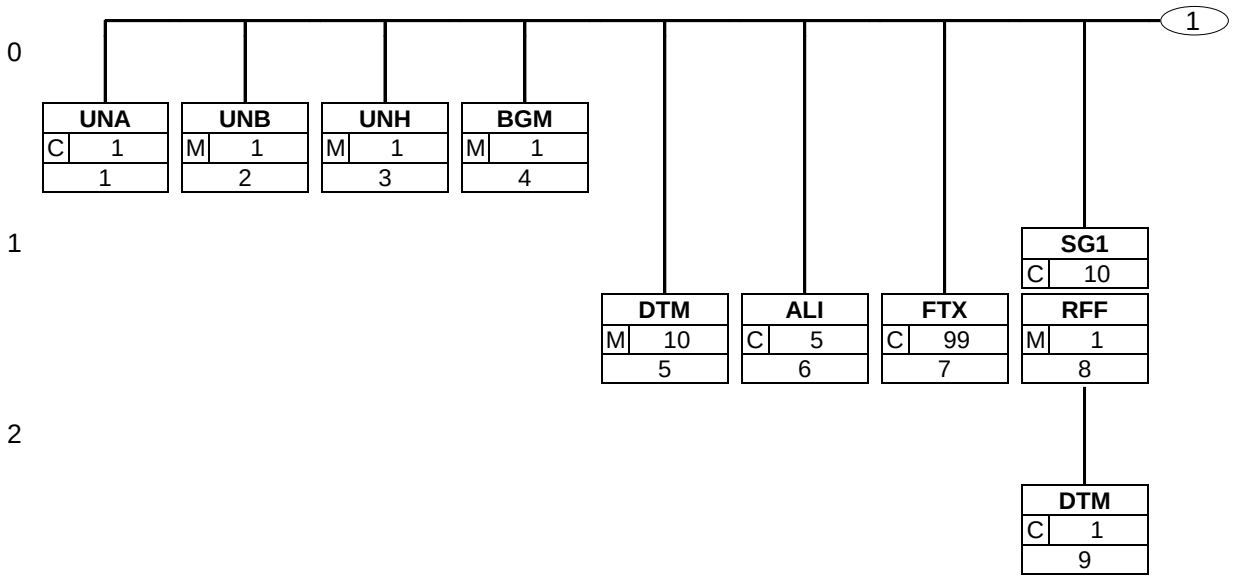

3. Branching Diagram

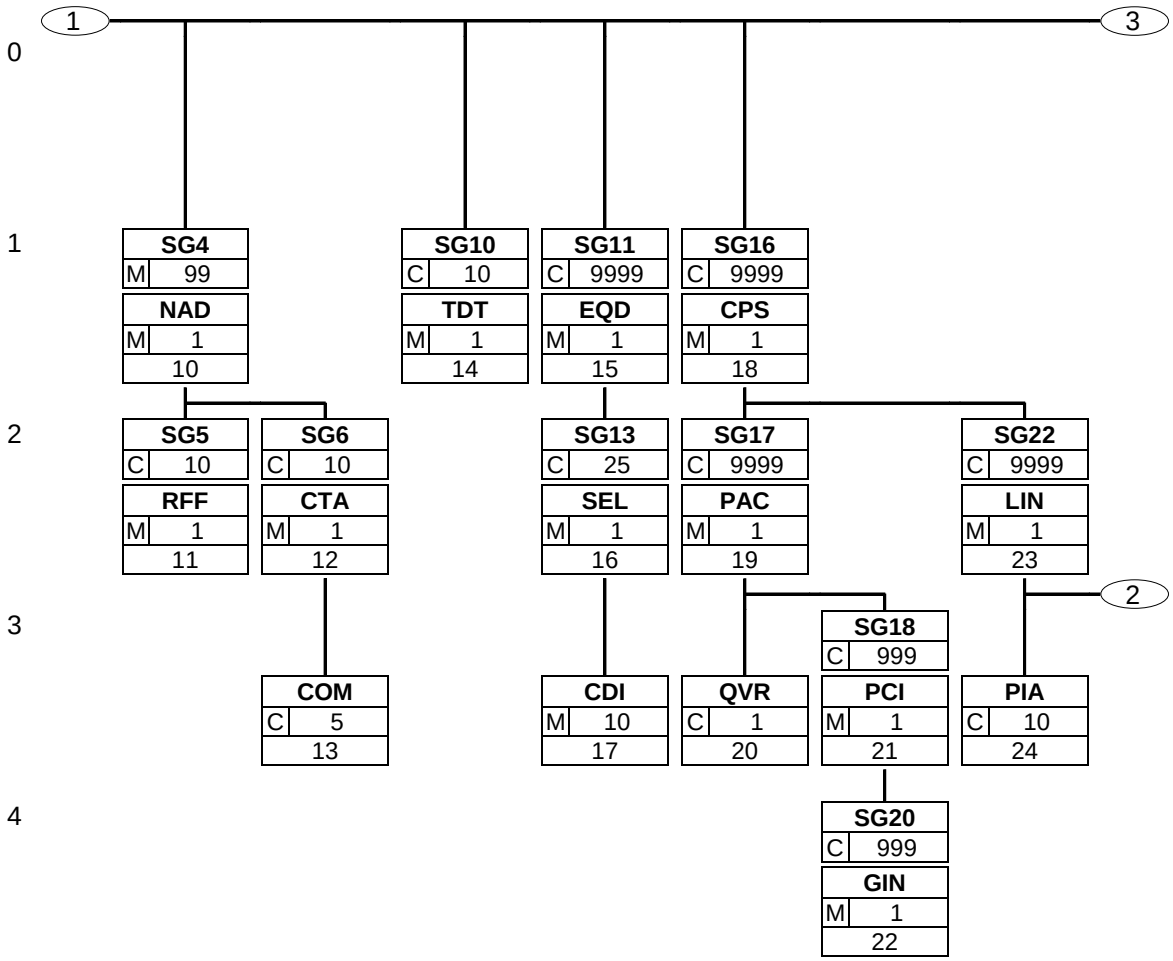

3. Branching Diagram

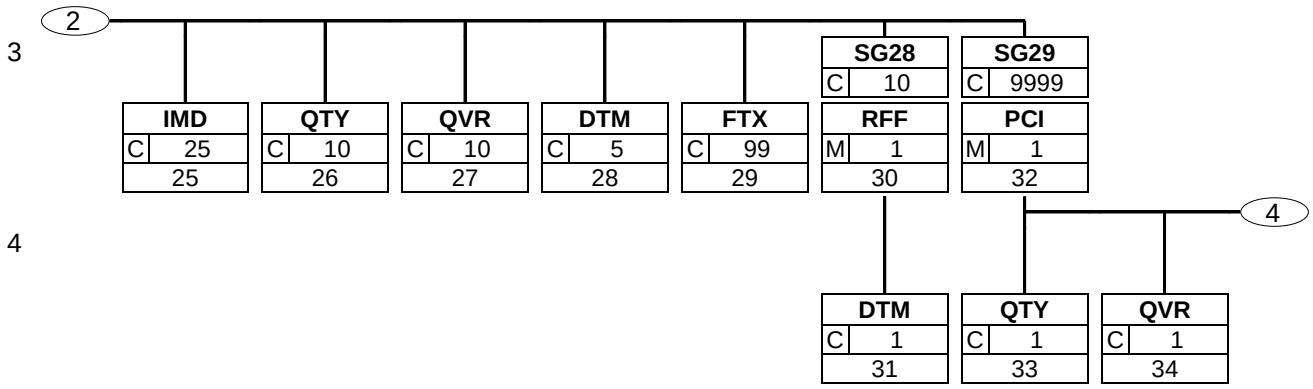

3. Branching Diagram

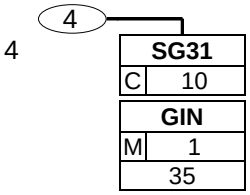

3. Branching Diagram

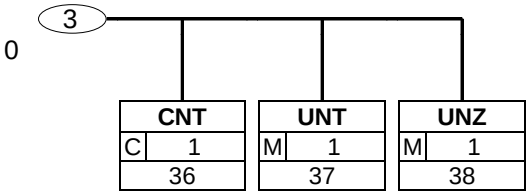

4. Segments Description

UNA - C 1 - Service string advice

This segment is used to inform the receiver of the interchange that a set of service string characters which are different to the default characters are being used.

UNB - M 1 - Interchange header

This segment is used to envelope the interchange, as well as to identify both, the party to whom the interchange is sent and the party who has sent the interchange. The principle of the UNB segment is the same as a physical envelope which covers one or more letters or documents, and which details, both the address where delivery is to take place and the address from where the envelope has come.

Receiving Advice Heading Section

UNH - M 1 - Message header

This message is used to head, identify and specify a message.

BGM - M 1 - Beginning of message

This segment is used to indicate the type and function of a message and to transmit the identifying number.

DTM - M 10 - Date/time/period

This segment is used to specify any dates related to the complete receiving advice message.

ALI - C 5 - Additional information

This segment is used to specify any additional information related to the complete order.

FTX - C 99 - Free text

This segment is used to provide any free text information related to the complete message.

SG1 - C 10 - **RFF-DTM**

A group of segments giving references where necessary, dates relating to the whole message, e.g. despatch advice, contract number.

RFF - M 1 - Reference

This segment is used to specify references which apply to the whole receiving advice message.

DTM - C 1 - Date/time/period

This segment is used to specify dates relating to the references given in the previous RFF segment.

SG4 - M 99 - **NAD-SG5-SG6**

A group of segments identifying names, addresses and locations, relevant to the whole Receiving advice.

NAD - M 1 - Name and address

This segment is used to identify the trading partners involved in the Receiving Advice message. Identification of the sender and recipient of the goods is mandatory in the Receiving Advice.

SG5 - C 10 - **RFF**

A group of segments giving references only relevant to the specified party rather than the whole message.

RFF - M 1 - Reference

This segment is used to specify references related to the party identified in the previous NAD segment.

SG6 - C 10 - **CTA-COM**

A group of segments giving contact details of the specific person or department within the party identified in the NAD segment.

4. Segments Description

CTA - M 1 - Contact information

This segment is used to identify contact name and/or department within the party specified in the NAD segment.

COM - C 5 - Communication contact

This segment identifies the communications number, and type of communications, for the person and/or department identified in the preceding CTA segment.

SG10 - C 10 - **TDT**

A group of segments specifying details of the mode and means of transport.

TDT - M 1 - Details of transport

This segment is used to specify the transport details used to deliver the goods detailed in the receiving advice message.

SG11 - C 9999 - **EQD-SG13**

A group of segments identifying equipment with which a problem has occurred or if required by the recipient of the message for further identification.

EQD - M 1 - Equipment details

This segment is used to provide information on equipment which has been used in the despatch of the products ordered.

SG13 - C 25 - **SEL-CDI**

A group of segments identifying the seal number and reporting anomalies.

SEL - M 1 - Seal number

This segment is used to specify a seal number which is connected to the equipment identified in the EQD segment.

CDI - M 10 - Physical or logical state

This segment is used to specify the physical state of the seal number.

Receiving Advice Detail Section

SG16 - C 9999 - **CPS-SG17-SG22**

A group of segments providing details of all packages and/or individual items as received. This segment group provides the capability to give the top-down hierarchical relationship of the package levels.

CPS - M 1 - Consignment packing sequence

This segment is used to provide a detailed description of the packaging of the goods.

SG17 - C 9999 - **PAC-QVR-SG18**

A group of segments identifying packaging, quantities and marks and numbers.

PAC - M 1 - Package

This segment is used to identify the total number of packages and package types for the hierarchical level identified in the CPS segment.

QVR - C 1 - Quantity variances

This segment is used to indicate quantity variances related to the currently identified package.

SG18 - C 999 - **PCI-SG20**

A group of segments specifying markings and labels.

PCI - M 1 - Package identification

This segment is used to provide markings and labels information relevant to the packaging unit identified in the PAC segment.

SG20 - C 999 - **GIN**

A group of segments giving package identification numbers.

4. Segments Description

GIN	- M	1	- Goods identity number This segment is used to provide identification numbers relevant to the packaging unit identified in the PAC segment.
SG22	- C	9999	- **LIN-PIA-IMD-QTY-QVR-DTM-FTX-SG28-SG29** A group of segments providing details of the product or service received.
LIN	- M	1	- Line item This segment is used to identify the product received.
PIA	- C	10	- Additional product id This segment is used to specify additional product codes for the current line item.
IMD	- C	25	- Item description This segment is used to provide a description for the current line item.
QTY	- C	10	- Quantity This segment is used to specify any quantities related to the current line item.
QVR	- C	10	- Quantity variances This segment is used to specify any variances between what was received and accepted and what was ordered/shipped.
DTM	- C	5	- Date/time/period This segment is used to specify dates related to the current line item.
FTX	- C	99	- Free text
SG28	- C	10	- **RFF-DTM** A group of segments giving references and dates relevant to the line item.
RFF	- M	1	- Reference This segment is used to specify any references associated with the current line item.
DTM	- C	1	- Date/time/period This segment is used to specify dates related to the references given in the previous RFF segment.
SG29	- C	9999	- **PCI-QTY-QVR-SG31** A group of segments identifying one specific package or a number of packages, the marks and numbers, quantities and receiving conditions.
PCI	- M	1	- Package identification This segment is used to provide markings and labels information relevant to the product identified in the LIN segment.
QTY	- C	1	- Quantity This segment is used to indicate the quantity of the current line item received and accepted which is contained in the package marked with the Serial Shipping Container Code identified in the following GIN segment.
QVR	- C	1	- Quantity variances This segment is used to specify quantity variances for the current line item which is contained in the package marked with the Serial Shipping Container Code identified in the following GIN segment.
SG31	- C	10	- **GIN** A group of segments giving package identification numbers.
GIN	- M	1	- Goods identity number This segment is used to provide the Serial Shipping Container Code marked on the packaging of the current line item.

<u>Receiving Advice Summary Section</u>

4. Segments Description

CNT - C 1	-	Control total This segment is used to provide message control information for checking on the message receivers in-house system.
UNT - M 1	-	Message trailer This segment is a mandatory UN/EDIFACT segment. It must always be the last segment in the message.
UNZ - M 1	-	Interchange trailer This segment is used to provide the trailer of an interchange.

5. Segments Layout

This section describes each segment used in the EANCOM® Receiving advice message. The original EDIFACT segment layout is listed. The appropriate comments relevant to the EANCOM® subset are indicated.

Notes:

1. The segments are presented in the sequence in which they appear in the message. The segment or segment group tag is followed by the (M)andatory / (C)onditional indicator, the maximum number of occurrences and the segment description.

2. Reading from left to right, in column one, the data element tags and descriptions are shown, followed by in the second column the EDIFACT status (M or C), the field format, and the picture of the data elements. These first pieces of information constitute the original EDIFACT segment layout.

   Following the EDIFACT information, EANCOM® specific information is provided in the third, fourth, and fifth columns. In the third column a status indicator for the use of (C)onditional EDIFACT data elements (see 2.1 through 2.3 below), in the fourth column the restricted indicator (see point 3 on the following page), and in the fifth column notes and code values used for specific data elements in the message.

2.1 (M)andatory data elements in EDIFACT segments retain their status in EANCOM®.

2.2 Additionally, there are five types of status for data elements with a (C)onditional EDIFACT status, whether for simple, component or composite data elements. These are listed below and can be identified when relevant by the following abbreviations:

- REQUIRED	**R**	Indicates that the entity is required and must be sent.
- ADVISED	**A**	Indicates that the entity is advised or recommended.
- DEPENDENT	**D**	Indicates that the entity must be sent in certain conditions, as defined by the relevant explanatory note.
- OPTIONAL	**O**	Indicates that the entity is optional and may be sent at the discretion of the user.
- NOT USED	**N**	Indicates that the entity is not used and should be omitted.

2.3 If a composite is flagged as **N, NOT USED**, all data elements within that composite will have blank status indicators assigned to them.

3. Status indicators detailed in the fourth column which directly relate to the code values detailed in the fifth **column** may have two values:

- RESTRICTED	*****	A data element marked with an asterisk (*) in the fourth column indicates that the listed codes in column five are the only codes available for use with this data element, in this segment, in this message.
- OPEN		All data elements where coded representation of data is possible and a restricted set of code values is not indicated are open (no asterisk in fourth column). The available codes are listed in the EANCOM® Data Elements and Code Sets Directory. Code values may be given as examples or there may be a note on the format or type of code to be used.

4. Different colours are used for the code values in the segment details: restricted codes are in red and open codes in blue.

5. Segments Layout

Segment number: 1

UNA	- C	1 - Service string advice			
Function: The service string advice shall begin with the upper case characters UNA immediately followed by six characters in the order shown below. The space character shall not be used in positions 010, 020, 040, 050 or 060. The same character shall not be used in more than one position of the UNA.					
		EDIFACT	GS1	*	Description
UNA1	Component data element separator	M an1	**M**	*	Used as a separator between component data elements contained within a composite data element (default value: ":")
UNA2	Data element separator	M an1	**M**	*	Used to separate two simple or composite data elements (default value: "+")
UNA3	Decimal mark	M an1	**M**	*	Used to indicate the character used for decimal notation (default value:".")
UNA4	Release character	M an1	**M**	*	Used to restore any service character to its original specification (value: "?").
UNA5	Repetition separator	M an1	**M**	*	Used to indicate the character used for repetition separation (value: " * ").
UNA6	Segment terminator	M an1	**M**	*	Used to indicate the end of segment data (default value: " ' ")

Segment Notes:

This segment is used to inform the receiver of the interchange that a set of service string characters which are different to the default characters are being used.
When using the default set of service characters, the UNA segment need not be sent. If it is sent, it must immediately precede the UNB segment and contain the four service string characters (positions UNA1, UNA2, UNA4 and UNA6) selected by the interchange sender.
Regardless of whether or not all of the service string characters are being changed every data element within this segment must be filled, (i.e., if some default values are being used with user defined ones, both the default and user defined values must be specified).
When expressing the service string characters in the UNA segment, it is not necessary to include any element separators.
The use of the UNA segment is required when using a character set other than level A.
UNA:+.?*'

5. Segments Layout

Segment number: 2

UNB - M 1 - Interchange header

Function:

To identify an interchange.

Notes:
1. S001/0002, shall be '4' to indicate this version of the syntax.
2. The combination of the values carried in data elements S002, S003 and 0020 shall be used to identify uniquely the interchange, for the purpose of acknowledgement.

		EDIFACT	GS1	*	Description
S001	SYNTAX IDENTIFIER	M	**M**		See Part I chapter 5.2.7 and segment notes.
0001	Syntax identifier	M a4	**M**	*	UNOA = UN/ECE level A UNOB = UN/ECE level B UNOC = UN/ECE level C UNOD = UN/ECE level D UNOE = UN/ECE level E UNOF = UN/ECE level F UNOG = UN/ECE level G UNOH = UN/ECE level H UNOI = UN/ECE level I UNOJ = UN/ECE level J UNOK = UN/ECE level K UNOW = UN/ECE level W UNOX = UN/ECE level X UNOY = UN/ECE level Y
0002	Syntax version number	M an1	**M**	*	4 = Version 4
0080	Service code list directory version number	C an..6	**N**		
0133	Character encoding, coded	C an..3	**N**		
S002	INTERCHANGE SENDER	M	**M**		
0004	Interchange sender identification	M an..35	**M**		GLN (n13)
0007	Identification code qualifier	C an..4	**R**	*	14 = GS1
0008	Interchange sender internal identification	C an..35	**O**		
0042	Interchange sender internal sub-identification	C an..35	**N**		
S003	INTERCHANGE RECIPIENT	M	**M**		
0010	Interchange recipient identification	M an..35	**M**		GLN (n13)
0007	Identification code qualifier	C an..4	**R**	*	14 = GS1
0014	Interchange recipient internal identification	C an..35	**O**		
0046	Interchange recipient internal sub-identification	C an..35	**N**		
S004	DATE AND TIME OF PREPARATION	M	**M**		
0017	Date	M n8	**M**		CCYYMMDD
0019	Time	M n4	**M**		HHMM
0020	Interchange control reference	M an..14	**M**		Unique reference identifying the interchange. Created

5. Segments Layout

Segment number: 2

		EDIFACT	GS1	*	Description
					by the interchange sender.
S005	RECIPIENT REFERENCE/ PASSWORD DETAILS	C	**O**		
0022	Recipient reference/password	M an..14	**M**		
0025	Recipient reference/password qualifier	C an2	**O**		
0026	Application reference	C an..14	**O**		Message identification if the interchange contains only one type of message.
0029	Processing priority code	C a1	**O**		A = Highest priority
0031	Acknowledgement request	C n1	**O**		1 = Requested
0032	Interchange agreement identifier	C an..35	**O**	*	EANCOM.....
0035	Test indicator	C n1	**O**		1 = Interchange is a test

Segment Notes:

This segment is used to envelope the interchange, as well as to identify both, the party to whom the interchange is sent and the party who has sent the interchange. The principle of the UNB segment is the same as a physical envelope which covers one or more letters or documents, and which details, both the address where delivery is to take place and the address from where the envelope has come.
S001: The character encoding specified in basic code table of ISO/IEC 646 (7-bit coded character set for information interchange) shall be used for the interchange service string advice (if used) and up to and including the composite data element S001 'Syntax identifier' in the interchange header. The character repertoire used for the characters in an interchange shall be identified from the code value of data element 0001 in S001 'Syntax identifier' in the interchange header. The character repertoire identified does not apply to objects and/or encrypted data.
The default encoding technique for a particular repertoire shall be the encoding technique defined by its associated character set specification.
DE 0001: The recommended (default) character set for use in EANCOM® for international exchanges is character set A (UNOA). Should users wish to use character sets other than A, an agreement on which set to use should be reached on a bilateral basis before communications begin.
DE 0004, 0008, 0010 and 0014: Within EANCOM® the use of the Global Location Number (GLN) is recommended for the identification of the interchange sender and recipient.
DE 0008: Identification (e.g. a division) specified by the sender of the interchange, to be included if agreed, by the recipient in response interchanges, to facilitate internal routing.
DE 0014: The address for routing, provided beforehand by the interchange recipient, is used by the interchange sender to inform the recipient of the internal address, within the latter's systems, to which the interchange should be routed. It is recommended that the GLN be used for this purpose.
DE 0007: Identification (e.g. a division) specified by the recipient of the interchange, to be included if agreed, by the sender in response interchanges, to facilitate internal routing.
DE S004: The date and time specified in this composite should be the date and time at which the interchange sender prepared the interchange. This date and time may not necessarily be the same as the date and time of contained messages.
DE 0020: The interchange control reference number is generated by the interchange sender and is used to identify uniquely each interchange. Should the interchange sender wish to re-use interchange control reference numbers, it is recommended that each number be preserved for at least a period of three months before being re-used. In order to guarantee uniqueness, the interchange control reference number should always be linked to the interchange sender's identification (DE 0004).
DE S005: The use of passwords must first be agreed bilaterally by the parties exchanging the interchange.
DE 0026: This data element is used to identify the application, on the interchange recipient's system, to which the interchange is directed. This data element may only be used if the interchange contains only one type of message, (e.g. only invoices). The reference used in this data element is assigned by the interchange sender.
DE 0031: This data element is used to indicate whether an acknowledgement to the interchange is required. The EANCOM® APERAK or CONTRL message should be used to provide acknowledgement of interchange receipt. In addition, the EANCOM® CONTRL message may be used to indicate when an interchange has been rejected

5. Segments Layout

Segment number: 2

due to syntax errors.
DE 0032: This data element is used to identify any underlying agreements which control the exchange of data. Within EANCOM® , the identity of such agreements must start with the letters 'EANCOM', the remaining characters within the data element being filled according to bilateral agreements.

UNB+UNOC:4+5412345678908:14+8798765432106:14+20020102:1000+12345555+++++EANCOMREF 52'

5. Segments Layout

Segment number: 3

UNH - M 1 - Message header

Function:

To head, identify and specify a message.

Notes:
1. Data element S009/0057 is retained for upward compatibility. The use of S016 and/or S017 is encouraged in preference.
2. The combination of the values carried in data elements 0062 and S009 shall be used to identify uniquely the message within its group (if used) or if not used, within its interchange, for the purpose of acknowledgement.

		EDIFACT	GS1	*	Description
0062	Message reference number	M an..14	**M**		Senders unique message reference. Sequence number of the messages in the interchange. DE 0062 in the UNT will be identical. Sender generated.
S009	MESSAGE IDENTIFIER	M	**M**		
0065	Message type	M an..6	**M**	*	RECADV = Receiving advice message
0052	Message version number	M an..3	**M**	*	D = Draft version/UN/EDIFACT Directory
0054	Message release number	M an..3	**M**	*	01B = Release 2001 - B
0051	Controlling agency, coded	M an..3	**M**	*	UN = UN/CEFACT
0057	Association assigned code	C an..6	**R**	*	EAN009 = GS1 version control number (GS1 Permanent Code) Indicates that the message is the EANCOM version 009 of the Receiving Advice.
0110	Code list directory version number	C an..6	**O**		This data element can be used to identify the codelist agreed by the interchange partners, e.g. EAN001 = EANCOM 2002 S4 codelist released on 01.12.2002 by GS1.
0113	Message type sub-function identification	C an..6	**N**		
0068	Common access reference	C an..35	**N**		
S010	STATUS OF THE TRANSFER	C	**N**		
0070	Sequence of transfers	M n..2			
0073	First and last transfer	C a1			
S016	MESSAGE SUBSET IDENTIFICATION	C	**N**		
0115	Message subset identification	M an..14			
0116	Message subset version number	C an..3			
0118	Message subset release number	C an..3			
0051	Controlling agency, coded	C an..3			
S017	MESSAGE IMPLEMENTATION GUIDELINE IDENTIFICATION	C	**N**		
0121	Message implementation guideline identification	M an..14			
0122	Message implementation guideline version number	C an..3			
0124	Message implementation	C an..3			

5. Segments Layout

Segment number: 3

		EDIFACT	GS1	*	Description
	guideline release number				
0051	Controlling agency, coded	C an..3			
S018	SCENARIO IDENTIFICATION	C	**N**		
0127	Scenario identification	M an..14			
0128	Scenario version number	C an..3			
0130	Scenario release number	C an..3			
0051	Controlling agency, coded	C an..3			

Segment Notes:

This message is used to head, identify and specify a message.
DE's 0065, 0052, 0054 and 0051: Indicate that the message is a UNSM Receiving Advice based on the D.01B directory under the control of the United Nations.

Example:
UNH+ME000001+RECADV:D:01B:UN:EAN009'

5. Segments Layout

Segment number: 4

BGM	- M	1 - Beginning of message			
Function: To indicate the type and function of a message and to transmit the identifying number.					
		EDIFACT	GS1	*	Description
C002	DOCUMENT/MESSAGE NAME	C	**R**		
1001	Document name code	C an..3	**R**	*	632 = Goods receipt
1131	Code list identification code	C an..17	**N**		
3055	Code list responsible agency code	C an..3	**N**		
1000	Document name	C an..35	**O**		
C106	DOCUMENT/MESSAGE IDENTIFICATION	C	**R**		
1004	Document identifier	C an..35	**R**		Receiving Advice number assigned by the document sender. For global unique identification of documents Global Document Type Identifier (GDTI) is available.
1056	Version identifier	C an..9	**N**		
1060	Revision identifier	C an..6	**N**		
1225	Message function code	C an..3	**R**	*	5 = Replace 9 = Original 27 = Not accepted 29 = Accepted without amendment 31 = Copy The message function coded, is a critical data element in this segment. It applies to all data indicated in the message. The following definitions apply for the restricted codes: 5 = Replace - This code indicates that the current receiving advice message is a replacement due to an error in a previous message. The previous message should be identified in the RFF segment group 1. 9 = Original - An original transmission of a Receiving Advice. 27 = Not accepted - Message to inform that the referenced message is not accepted by the recipient. The previous message number is specified in the RFF segment. 29 = Accepted without amendment - Referenced message is entirely accepted. The previous message number is specified in the RFF segment. 31 = Copy - A copy of a receiving advice for a third party for information purposes.
4343	Response type code	C an..3	**N**		

Segment Notes:

This segment is used to indicate the type and function of a message and to transmit the identifying number.
All references other than the document message number DE 1004 are to be put into the RFF segment.

Example:
BGM+632+REC5488+9'

5. Segments Layout

Segment number: 5

DTM - M 10 - Date/time/period					
Function: To specify date, and/or time, or period.					
		EDIFACT	GS1	*	Description
C507	DATE/TIME/PERIOD	M	**M**		
2005	Date or time or period function code qualifier	M an..3	**M**	*	35 = Delivery date/time, actual 50 = Goods receipt date/time 137 = Document/message date/time 178 = Arrival date/time, actual 200 = Pick-up/collection date/time of cargo 369 = Date and or time of handling, estimated 772 = Handling start date and/or time, actual 773 = Handling end date and/or time, estimated 774 = Handling end date and/or time, actual 98E = Discharge date/time, start (GS1 Temporary Code) 35 = Delivery date/time - This code is used to indicate a situation when the date/time of delivery was not the same as the date/time on which the goods were formally received. 200 = Pick-up date/time of cargo (backhauling) - This code is used to indicate the date/time on which goods detailed in the message were collected by the buyer.
2380	Date or time or period value	C an..35	**R**		
2379	Date or time or period format code	C an..3	**R**		102 = CCYYMMDD 203 = CCYYMMDDHHMM 718 = CCYYMMDD-CCYYMMDD

Segment Notes:

This segment is used to specify any dates related to the complete receiving advice message.
DE 2005: Identification of the 'Document/message date/time' (code value 137) is mandatory in an EANCOM message.

Example:
DTM+137:20021111:102'
DTM+50:200211051640:203'
The goods were received on the 5th of November 2002 at 4:40pm.

5. Segments Layout

Segment number: 6

ALI	- C	5 - Additional information			
Function: To indicate that special conditions due to the origin, customs preference, fiscal or commercial factors are applicable.					
		EDIFACT	GS1	*	Description
3239	Country of origin name code	C an..3	**C**		
9213	Duty regime type code	C an..3	**N**		
4183	Special condition code	C an..3	**R**		199 = Receipt advice, fully detailed 200 = Receipt advice, only exceptions
4183	Special condition code	C an..3	**N**		
4183	Special condition code	C an..3	**N**		
4183	Special condition code	C an..3	**N**		
4183	Special condition code	C an..3	**N**		

Segment Notes:

This segment is used to specify any additional information related to the complete order.
This segment is used to specify the type of receiving advice.

Example:
ALI+++199'

5. Segments Layout

Segment number: 7

FTX	- C	99 - Free text			
Function: To provide free form or coded text information.					
		EDIFACT	GS1	*	Description
4451	Text subject code qualifier	M an..3	**M**		AAI = General information DAR = Damage remarks ZZZ = Mutually defined
4453	Free text function code	C an..3	**O**	*	1 = Text for subsequent use 3 = Text for immediate use
C107	TEXT REFERENCE	C	**D**		References to a standard text. This composite is only used when trading partners have agreed to use mutually defined code values.
4441	Free text value code	M an..17	**M**		001 = ...standard text...
1131	Code list identification code	C an..17	**O**		
3055	Code list responsible agency code	C an..3	**D**		91 = Assigned by supplier or supplier's agent 92 = Assigned by buyer or buyer's agent
C108	TEXT LITERAL	C	**D**		This composite is only used if coded text can not be used.
4440	Free text value	M an..512	**M**		
4440	Free text value	C an..512	**O**		
4440	Free text value	C an..512	**O**		
4440	Free text value	C an..512	**O**		
4440	Free text value	C an..512	**O**		
3453	Language name code	C an..3	**D**		ISO 639 two alpha code This data element is only used when non-coded free text has been provided in data element C108.
4447	Free text format code	C an..3	**N**		

Segment Notes:

This segment is used to provide any free text information related to the complete message.
Use of this segment in free form is not recommended since it may inhibit automatic processing of the message.
Coded references to standard texts is an available functionality which enables automatic processing and reduces transmission and processing overheads. Standard texts should be mutually defined among trading partners and can be used to cover legal and other requirements.

Example:
FTX+AAI+1+001::91'

5. Segments Layout

Segment number: 8

SG1	- C	10 -	RFF-DTM
RFF	- M	1 -	Reference

Function:

To specify a reference.

		EDIFACT	GS1	*	Description
C506	REFERENCE	M	**M**		
1153	Reference code qualifier	M an..3	**M**		AAK = Despatch advice number AAU = Despatch note number ALO = Receiving advice number CR = Customer reference number ON = Order number (buyer) POR = Purchase order response number PP = Purchase order change number VN = Order number (supplier) The code 'ALO' should only be used when the code value '5' was used in DE 1225 of the BGM segment.
1154	Reference identifier	C an..70	**R**		
1156	Document line identifier	C an..6	**N**		
4000	Reference version identifier	C an..35	**N**		
1060	Revision identifier	C an..6	**N**		

Segment Notes:

This segment is used to specify references which apply to the whole receiving advice message.

Example:
RFF+AAK:533662'

5. Segments Layout

Segment number: 9

SG1	- C	10 -	RFF-DTM
DTM	- C	1 -	Date/time/period

Function:

To specify date, and/or time, or period.

		EDIFACT	GS1	*	Description
C507	DATE/TIME/PERIOD	M	**M**		
2005	Date or time or period function code qualifier	M an..3	**M**	*	171 = Reference date/time
2380	Date or time or period value	C an..35	**R**		
2379	Date or time or period format code	C an..3	**R**		102 = CCYYMMDD

Segment Notes:

This segment is used to specify dates relating to the references given in the previous RFF segment.

Example:
DTM+171:20021025:102'

5. Segments Layout

Segment number: 10

SG4	- M	99	-	NAD-SG5-SG6
NAD	- M	1	-	Name and address

Function:

To specify the name/address and their related function, either by C082 only and/or unstructured by C058 or structured by C080 thru 3207.

		EDIFACT	GS1	*	Description
3035	Party function code qualifier	M an..3	**M**		BY = Buyer DP = Delivery party DEQ = Shipper SU = Supplier UC = Ultimate consignee
C082	PARTY IDENTIFICATION DETAILS	C	**A**		
3039	Party identifier	M an..35	**M**		For identification of parties it is recommended to use GLN - Format n13.
1131	Code list identification code	C an..17	**N**		
3055	Code list responsible agency code	C an..3	**R**	*	9 = GS1
C058	NAME AND ADDRESS	C	**O**		This composite may only be used to fulfill the requirements of directive 2003/58/EC, article 4.
3124	Name and address description	M an..35	**M**		
3124	Name and address description	C an..35	**O**		
3124	Name and address description	C an..35	**O**		
3124	Name and address description	C an..35	**O**		
3124	Name and address description	C an..35	**O**		
C080	PARTY NAME	C	**D**		
3036	Party name	M an..35	**M**		Party Name in clear text.
3036	Party name	C an..35	**O**		
3036	Party name	C an..35	**O**		
3036	Party name	C an..35	**O**		
3036	Party name	C an..35	**O**		
3045	Party name format code	C an..3	**O**		
C059	STREET	C	**D**		
3042	Street and number or post office box identifier	M an..35	**M**		Building Name/Number and Street Name and/or P.O. Box
3042	Street and number or post office box identifier	C an..35	**O**		
3042	Street and number or post office box identifier	C an..35	**O**		
3042	Street and number or post office box identifier	C an..35	**O**		
3164	City name	C an..35	**D**		City/Town, clear text.
C819	COUNTRY SUB-ENTITY DETAILS	C	**D**		
3229	Country sub-entity name code	C an..9	**O**		

5. Segments Layout

Segment number: 10

		EDIFACT	GS1	*	Description
1131	Code list identification code	C an..17	**O**		
3055	Code list responsible agency code	C an..3	**O**		
3228	Country sub-entity name	C an..70	**O**		County/State in clear text.
3251	Postal identification code	C an..17	**D**		Postal Code
3207	Country name code	C an..3	**D**		ISO 3166 two alpha code

Segment Notes:

This segment is used to identify the trading partners involved in the Receiving Advice message. Identification of the sender and recipient of the goods is mandatory in the Receiving Advice.

Example:
NAD+BY+5412345000013::9'
NAD+SU+5412345000020::9'

Dependency Notes:
The following composites and data elements are only used when a coded name and address can not be used.
The affected composites and data elements are as follows:
C080 - C059 - 3164 - C819 - 3251 - 3207

5. Segments Layout

Segment number: 11

SG4	- M	99	-	NAD-SG5-SG6
SG5	- C	10	-	RFF
RFF	- M	1	-	Reference

Function:

To specify a reference.

		EDIFACT	GS1	*	Description
C506	REFERENCE	M	**M**		
1153	Reference code qualifier	M an..3	**M**	*	AMT = Goods and Services Tax identification number FC = Fiscal number GN = Government reference number VA = VAT registration number YC1 = Additional party identification (GS1 Temporary Code)
1154	Reference identifier	C an..70	**R**		
1156	Document line identifier	C an..6	**N**		
4000	Reference version identifier	C an..35	**N**		
1060	Revision identifier	C an..6	**N**		

Segment Notes:

This segment is used to specify references related to the party identified in the previous NAD segment.

Example:
RFF+VA:AF48776'

5. Segments Layout

Segment number: 12

SG4	- M	99 -	NAD-SG5-SG6
SG6	- C	10 -	CTA-COM
CTA	- M	1 -	Contact information

Function:

To identify a person or a department to whom communication should be directed.

		EDIFACT	GS1	*	Description
3139	Contact function code	C an..3	**R**		GR = Goods receiving contact
C056	DEPARTMENT OR EMPLOYEE DETAILS	C	**O**		
3413	Department or employee name code	C an..17	**O**		
3412	Department or employee name	C an..35	**O**		

Segment Notes:

This segment is used to identify contact name and/or department within the party specified in the NAD segment. The Global Location Number GLN - Format n13 - is particularly suitable for this purpose.

Example:
CTA+GR+:C SANCHEZ'

5. Segments Layout

Segment number: 13

SG4	- M	99 -	NAD-SG5-SG6
SG6	- C	10 -	CTA-COM
COM	- C	5 -	Communication contact

Function:

To identify a communication number of a department or a person to whom communication should be directed.

		EDIFACT	GS1	*	Description
C076	COMMUNICATION CONTACT	M	**M**		
3148	Communication address identifier	M an..512	**M**		
3155	Communication address code qualifier	M an..3	**M**		AO = Uniform Resource Location (URL) EI = EDI EM = Electronic mail TE = Telephone

Segment Notes:

This segment identifies the communications number, and type of communications, for the person and/or department identified in the preceding CTA segment.

Example:
COM+00445885521:TE'

5. Segments Layout

Segment number: 14

SG10	- C	10 -	TDT
TDT	- M	1 -	Details of transport

Function:

To specify the transport details such as mode of transport, means of transport, its conveyance reference number and the identification of the means of transport.
The segment may be pointed to by the TPL segment.

		EDIFACT	GS1	*	Description
8051	Transport stage code qualifier	M an..3	**M**		20 = Main-carriage transport
8028	Means of transport journey identifier	C an..17	**O**		Reference number covering the transport.
C220	MODE OF TRANSPORT	C	**A**		
8067	Transport mode name code	C an..3	**R**		
8066	Transport mode name	C an..17	**N**		
C228	TRANSPORT MEANS	C	**O**		Data Elements 8179 and 8178 are only used when the type of transport must be specifically identified, that is, when a generic description such as road transport is unsuitable.
8179	Transport means description code	C an..8	**D**		23 = Rail bulk car 31 = Truck
8178	Transport means description	C an..17	**D**		
C040	CARRIER	C	**O**		
3127	Carrier identifier	C an..17	**A**		Global Location Number GLN - Format n13
1131	Code list identification code	C an..17	**O**		
3055	Code list responsible agency code	C an..3	**D**		9 = GS1
3128	Carrier name	C an..35	**O**		
8101	Transit direction indicator code	C an..3	**O**		BS = Buyer to supplier SB = Supplier to buyer
C401	EXCESS TRANSPORTATION INFORMATION	C	**N**		
8457	Excess transportation reason code	M an..3			
8459	Excess transportation responsibility code	M an..3			
7130	Customer shipment authorisation identifier	C an..17			
C222	TRANSPORT IDENTIFICATION	C	**O**		
8213	Transport means identification name identifier	C an..9	**O**		
1131	Code list identification code	C an..17	**O**		
3055	Code list responsible agency code	C an..3	**D**		DE 3055 must be used if DE 8213 is used.
8212	Transport means identification name	C an..35	**R**		Vehicle licence plate/Aircraft number
8453	Transport means nationality code	C an..3	**O**		ISO 3166 two alpha code

5. Segments Layout

Segment number: 14

	EDIFACT	GS1	*	Description
8281 Transport means ownership indicator code	C an..3	**N**		

Segment Notes:

This segment is used to specify the transport details used to deliver the goods detailed in the receiving advice message.

Example:
TDT+20++30+31'

5. Segments Layout

Segment number: 15

SG11	- C	9999	-	EQD-SG13
EQD	- M	1	-	Equipment details

Function:

To identify a unit of equipment.

		EDIFACT	GS1	*	Description
8053	Equipment type code qualifier	M an..3	**M**		CN = Container TE = Trailer
C237	EQUIPMENT IDENTIFICATION	C	**O**		
8260	Equipment identifier	C an..17	**A**		
1131	Code list identification code	C an..17	**O**		
3055	Code list responsible agency code	C an..3	**D**		87 = Assigned by carrier This data element must be used if DE8260 is used.
3207	Country name code	C an..3	**O**		
C224	EQUIPMENT SIZE AND TYPE	C	**O**		
8155	Equipment size and type description code	C an..10	**O**		
1131	Code list identification code	C an..17	**O**		
3055	Code list responsible agency code	C an..3	**D**		This data element must be used if no UN/EDIFACT code is used in DE 8155.
8154	Equipment size and type description	C an..35	**O**		
8077	Equipment supplier code	C an..3	**O**		
8249	Equipment status code	C an..3	**O**		
8169	Full or empty indicator code	C an..3	**O**		

Segment Notes:

This segment is used to provide information on equipment which has been used in the despatch of the products ordered.

Example:
EQD+TE+93219::87'

5. Segments Layout

Segment number: 16

SG11	- C	9999	-	EQD-SG13
SG13	- C	25	-	SEL-CDI
SEL	- M	1	-	Seal number

Function:

To specify the seal number or a range of seal numbers.

		EDIFACT	GS1	*	Description
9308	Seal identifier	C an..35	**R**		
C215	SEAL ISSUER	C	**R**		
9303	Sealing party name code	C an..3	**R**		CA = Carrier CU = Customs
1131	Code list identification code	C an..17	**O**		
3055	Code list responsible agency code	C an..3	**D**		9 = GS1 This data element must be used if no UN/EDIFACT code is used in DE 9303.
9302	Sealing party name	C an..35	**O**		
4517	Seal condition code	C an..3	**N**		
C208	IDENTITY NUMBER RANGE	C	**N**		
7402	Object identifier	M an..35			
7402	Object identifier	C an..35			

Segment Notes:

This segment is used to specify a seal number which is connected to the equipment identified in the EQD segment.

Example:
SEL+2167+CU'

5. Segments Layout

Segment number: 17

SG11	- C	9999	-	EQD-SG13
SG13	- C	25	-	SEL-CDI
CDI	- M	10	-	Physical or logical state

Function:

To describe a physical or logical state.

		EDIFACT	GS1	*	Description
7001	Physical or logical state type code qualifier	M an..3	**M**	*	1 = Upon receipt
C564	PHYSICAL OR LOGICAL STATE INFORMATION	M	**M**		
7007	Physical or logical state description code	C an..3	**R**		4 = Damaged
1131	Code list identification code	C an..17	**O**		
3055	Code list responsible agency code	C an..3	**D**		9 = GS1 This data element must be used if no UN/EDIFACT code is used in DE 7007.
7006	Physical or logical state description	C an..70	**O**		

Segment Notes:

This segment is used to specify the physical state of the seal number.

Example:
CDI+1+4'

5. Segments Layout

Segment number: 18

SG16	- C	9999	-	CPS-SG17-SG22
CPS	- M	1	-	Consignment packing sequence

Function:

To identify the sequence in which physical packing is presented in the consignment, and optionally to identify the hierarchical relationship between packing layers.

		EDIFACT	GS1	*	Description
7164	Hierarchical structure level identifier	M an..35	**M**		Sequential numbering recommended. When not identifying different shipment hierarchical levels within the Receiving Advice, it is recommended to use a default value of 1.
7166	Hierarchical structure parent identifier	C an..35	**A**		
7075	Packaging level code	C an..3	**N**		

Segment Notes:

This segment is used to provide a detailed description of the packaging of the goods.

Example:
CPS+1'

5. Segments Layout

Segment number: 19

SG16	- C	9999 -	CPS-SG17-SG22
SG17	- C	9999 -	PAC-QVR-SG18
PAC	- M	1 -	Package

Function:

To describe the number and type of packages/physical units.

		EDIFACT	GS1	*	Description
7224	Package quantity	C n..8	**D**		In the "advice discrepancies" scenario this data element should be used when quantity variances at the package level have to be reported and carry the number of packages that were actually received. In the "confirmation of receipt of goods" scenario, this data element may carry the number of packages that were received.
C531	PACKAGING DETAILS	C	**C**		
7075	Packaging level code	C an..3	**N**		
7233	Packaging related description code	C an..3	**O**		50 = Package barcoded EAN-13 or EAN-8 51 = Package barcoded ITF-14 52 = Package barcoded UCC or EAN-128
7073	Packaging terms and conditions code	C an..3	**O**		1 = Packaging cost paid by supplier 2 = Packaging cost paid by recipient 3 = Packaging cost not charged (returnable)
C202	PACKAGE TYPE	C	**O**		
7065	Package type description code	C an..17	**A**		09 = Returnable pallet (GS1 Temporary Code) 201 = Pallet ISO 1 - 1/1 EURO Pallet (GS1 Temporary Code)
1131	Code list identification code	C an..17	**O**		
3055	Code list responsible agency code	C an..3	**D**		9 = GS1
7064	Type of packages	C an..35	**O**		
C402	PACKAGE TYPE IDENTIFICATION	C	**N**		
7077	Description format code	M an..3			
7064	Type of packages	M an..35			
7143	Item type identification code	C an..3			
7064	Type of packages	C an..35			
7143	Item type identification code	C an..3			
C532	RETURNABLE PACKAGE DETAILS	C	**D**		Composite C532 is only used where the packaging being described is returnable. This composite identifies who is responsible for payment of its return.
8395	Returnable package freight payment responsibility code	C an..3	**O**		1 = Paid by customer 2 = Free 3 = Paid by supplier
8393	Returnable package load contents code	C an..3	**N**		

Segment Notes:

This segment is used to identify the total number of packages and package types for the hierarchical level

5. Segments Layout

Segment number: 19

identified in the CPS segment.
Please refer to the 'Structure of the Receiving Advice Message' section in the introduction for details on the use of the PAC segment.

Example:
PAC+10++201::9'

5. Segments Layout

Segment number: 20

SG16	- C	9999 -	CPS-SG17-SG22
SG17	- C	9999 -	PAC-QVR-SG18
QVR	- C	1 -	Quantity variances

Function:

To specify item details relating to quantity variances.

		EDIFACT	GS1	*	Description
C279	QUANTITY DIFFERENCE INFORMATION	C	**R**		
6064	Quantity variance value	M n..15	**M**		Specify the actual variance amount here.
6063	Quantity type code qualifier	C an..3	**R**		124 = Damaged goods
4221	Discrepancy nature identification code	C an..3	**O**		
C960	REASON FOR CHANGE	C	**O**		
4295	Change reason description code	C an..3	**O**		BH = Batch number difference BI = Expiry date difference BJ = Item identification code unknown BN = Temperature outside agreed range PC = Pack difference
1131	Code list identification code	C an..17	**O**		
3055	Code list responsible agency code	C an..3	**D**		9 = GS1
4294	Change reason description	C an..35	**O**		

Segment Notes:

This segment is used to indicate quantity variances related to the currently identified package.
For negative values (e.g. damaged goods not accepted) the variance must be expressed as negative.

Example:
QVR+-40:124++BN::9'

5. Segments Layout

Segment number: 21

SG16	- C	9999 -	CPS-SG17-SG22
SG17	- C	9999 -	PAC-QVR-SG18
SG18	- C	999 -	PCI-SG20
PCI	- M	1 -	Package identification

Function:

To specify markings and labels on individual packages or physical units.

		EDIFACT	GS1	*	Description
4233	Marking instructions code	C an..3	**R**		17 = Supplier's instructions 39 = Marked with Serial Shipping Container Code (SSCC)
C210	MARKS & LABELS	C	**O**		
7102	Shipping marks description	M an..35	**M**		
7102	Shipping marks description	C an..35	**O**		
7102	Shipping marks description	C an..35	**O**		
7102	Shipping marks description	C an..35	**O**		
7102	Shipping marks description	C an..35	**O**		
7102	Shipping marks description	C an..35	**O**		
7102	Shipping marks description	C an..35	**O**		
7102	Shipping marks description	C an..35	**O**		
7102	Shipping marks description	C an..35	**O**		
7102	Shipping marks description	C an..35	**O**		
8275	Container or package contents indicator code	C an..3	**N**		
C827	TYPE OF MARKING	C	**N**		
7511	Marking type code	M an..3			
1131	Code list identification code	C an..17			
3055	Code list responsible agency code	C an..3			

Segment Notes:

This segment is used to provide markings and labels information relevant to the packaging unit identified in the PAC segment.
The segment may be used to provide labelling information on shipping containers not known by the receiver of the goods.

Example:
PCI+17+CONTAINER ABN54421'

5. Segments Layout

Segment number: 22

SG16	- C	9999	-	CPS-SG17-SG22
SG17	- C	9999	-	PAC-QVR-SG18
SG18	- C	999	-	PCI-SG20
SG20	- C	999	-	GIN
GIN	- M	1	-	Goods identity number

Function:

To give specific identification numbers, either as single numbers or ranges.

		EDIFACT	GS1	*	Description
7405	Object identification code qualifier	M an..3	**M**		AW = Serial shipping container code BJ = Serial shipping container code
C208	IDENTITY NUMBER RANGE	M	**M**		
7402	Object identifier	M an..35	**M**		
7402	Object identifier	C an..35	**O**		
C208	IDENTITY NUMBER RANGE	C	**O**		
7402	Object identifier	M an..35	**M**		
7402	Object identifier	C an..35	**O**		
C208	IDENTITY NUMBER RANGE	C	**O**		
7402	Object identifier	M an..35	**M**		
7402	Object identifier	C an..35	**O**		
C208	IDENTITY NUMBER RANGE	C	**O**		
7402	Object identifier	M an..35	**M**		
7402	Object identifier	C an..35	**O**		
C208	IDENTITY NUMBER RANGE	C	**O**		
7402	Object identifier	M an..35	**M**		
7402	Object identifier	C an..35	**O**		

Segment Notes:

This segment is used to provide identification numbers relevant to the packaging unit identified in the PAC segment.
DE C208: If a sequential series of identity numbers is provided (e.g., 1 up to and including 10) only one repetition of the C208 composite is needed with the first repetition of 7402 specifying the numerically smaller identity number (e.g., 1) and the second repetition the larger identity number (e.g., 10). If identity numbers are not sequential and part of a series (e.g., 1, 3, and 10) then a separate C208 and DE 7402 must be used for each identity number.
In EANCOM it is recommended to use the Serial Shipping Container Code (SSCC) for unique identification of individual transport packages.

Example:
GIN+AW+354123450000000014'

5. Segments Layout

Segment number: 23

SG16	- C	9999 -	CPS-SG17-SG22
SG22	- C	9999 -	LIN-PIA-IMD-QTY-QVR-DTM-FTX-SG28-SG29
LIN	- M	1 -	Line item

Function:

To identify a line item and configuration.

		EDIFACT	GS1	*	Description
1082	Line item identifier	C an..6	**R**		Application generated number of the line item within the Receiving Advice.
1229	Action request/notification description code	C an..3	**N**		
C212	ITEM NUMBER IDENTIFICATION	C	**D**		This composite will only be used for the identification of GS1 codes. If another coding structure is required, e.g. HIBC, this composite will not be used and the code will be detailed in the PIA segment.
7140	Item identifier	C an..35	**R**		Format n..14 GTIN - this is the number of the article which has been received.
7143	Item type identification code	C an..3	**R**	*	SRV = GS1 Global Trade Item Number
1131	Code list identification code	C an..17	**N**		
3055	Code list responsible agency code	C an..3	**N**		
C829	SUB-LINE INFORMATION	C	**D**		
5495	Sub-line indicator code	C an..3	**R**	*	1 = Sub-line information
1082	Line item identifier	C an..6	**R**		
1222	Configuration level number	C n..2	**N**		
7083	Configuration operation code	C an..3	**N**		

Segment Notes:

This segment is used to identify the product received.
If Global Trade Item Numbers are available it is mandatory to use GTIN within the LIN segment.
If a product has been delivered but not accepted it must be identified using a separate line item. In these cases the received and accepted quantities are zero. Such products might include unknown or not ordered products, excess deliveries, damaged goods, unacceptable product variants or batch numbers, different pack size, etc..
Reasons for the action is detailed in the QTY-QVR-DTM segments.

Example:
LIN+1++5412345123453:SRV'

Dependency Notes:
C829 is only used when sub-lines are required.
FOR A COMPLETE DESCRIPTION ON THE USAGE OF SUB-LINES PLEASE REFER TO PART I, SECTION 4.10.

5. Segments Layout

Segment number: 24

SG16	- C	9999	-	CPS-SG17-SG22
SG22	- C	9999	-	LIN-PIA-IMD-QTY-QVR-DTM-FTX-SG28-SG29
PIA	- C	10	-	Additional product id

Function:

To specify additional or substitutional item identification codes.

		EDIFACT	GS1	*	Description
4347	Product identifier code qualifier	M an..3	**M**	*	1 = Additional identification 5 = Product identification Product Id function, coded has the following restricted coded functions: 1 = Additional Identification - To provide an additional identity for the primary GTIN identified in the LIN segment. The additional code can consist of: A supplemental identification which provides more information complementary to the GTIN provided in the LIN segment, e.g., a batch number, promotional variant number, etc,. An alternative identification which may be used instead of the main GTIN provided in the LIN segment, e.g., a buyers article number, an HIBC code, etc. 5 - Product Identification - To provide the primary product identification code when no GTIN has been provided in the LIN segment.
C212	ITEM NUMBER IDENTIFICATION	M	**M**		
7140	Item identifier	C an..35	**R**		
7143	Item type identification code	C an..3	**R**		AC = HIBC (Health Industry Bar Code) IB = ISBN (International Standard Book Number) IN = Buyer's item number PV = Promotional variant number SA = Supplier's article number SRV = GS1 Global Trade Item Number
1131	Code list identification code	C an..17	**O**		
3055	Code list responsible agency code	C an..3	**D**		9 = GS1 91 = Assigned by supplier or supplier's agent 92 = Assigned by buyer or buyer's agent
C212	ITEM NUMBER IDENTIFICATION	C	**O**		
7140	Item identifier	C an..35	**R**		
7143	Item type identification code	C an..3	**R**		
1131	Code list identification code	C an..17	**O**		
3055	Code list responsible agency code	C an..3	**D**		
C212	ITEM NUMBER IDENTIFICATION	C	**O**		
7140	Item identifier	C an..35	**R**		
7143	Item type identification code	C an..3	**R**		
1131	Code list identification code	C an..17	**O**		

5. Segments Layout

Segment number: 24

		EDIFACT	GS1	*	Description
3055	Code list responsible agency code	C an..3	**D**		
C212	ITEM NUMBER IDENTIFICATION	C	**O**		
7140	Item identifier	C an..35	**R**		
7143	Item type identification code	C an..3	**R**		
1131	Code list identification code	C an..17	**O**		
3055	Code list responsible agency code	C an..3	**D**		
C212	ITEM NUMBER IDENTIFICATION	C	**O**		
7140	Item identifier	C an..35	**R**		
7143	Item type identification code	C an..3	**R**		
1131	Code list identification code	C an..17	**O**		
3055	Code list responsible agency code	C an..3	**D**		

Segment Notes:

This segment is used to specify additional product codes for the current line item.

Examples:
PIA+1+AB5124:IN'
In this example the PIA segment is used to provide an additional identification to the GTIN provided in the LIN segment. The GTIN 5412345123453 provided in the LIN segment refers to the internal buyer's item number AB5124.

PIA+5+2209953C001L:AC'
This example details the HIBC code 2209953C001L which is provided as the primary product code because no GTIN was provided in the LIN segment.

5. Segments Layout

Segment number: 25

SG16	- C	9999 -	CPS-SG17-SG22
SG22	- C	9999 -	LIN-PIA-IMD-QTY-QVR-DTM-FTX-SG28-SG29
IMD	- C	25 -	Item description

Function:

To describe an item in either an industry or free format.

		EDIFACT	GS1	*	Description
7077	Description format code	C an..3	**O**	*	A = Free-form long description B = Code and text C = Code (from industry code list) E = Free-form short description F = Free-form S = Structured (from industry code list)
C272	ITEM CHARACTERISTIC	C	**O**		
7081	Item characteristic code	C an..3	**R**		
1131	Code list identification code	C an..17	**O**		
3055	Code list responsible agency code	C an..3	**D**	*	9 = GS1 Must be used if DE7081 contains an GS1 code.
C273	ITEM DESCRIPTION	C	**A**		
7009	Item description code	C an..17	**O**		CU = Consumer unit (GS1 Permanent Code) DU = Despatch unit (GS1 Permanent Code) RC = Returnable container (GS1 Permanent Code) TU = Traded unit (GS1 Permanent Code) VQ = Variable quantity product (GS1 Permanent Code) SER = Service (GS1 Permanent Code)
1131	Code list identification code	C an..17	**O**		
3055	Code list responsible agency code	C an..3	**D**		9 = GS1 91 = Assigned by supplier or supplier's agent 92 = Assigned by buyer or buyer's agent
7008	Item description	C an..256	**O**		
7008	Item description	C an..256	**O**		
3453	Language name code	C an..3	**O**		
7383	Surface or layer code	C an..3	**N**		

Segment Notes:

This segment is used to provide a description for the current line item.
It is recommended that this segment only be used for coded descriptions. Data element 7008 in clear text should only be used when no product code is available or when free-form descriptions are required by trading partners to communicate basic product descriptions.
GS1 recommends that free text product description be provided in the EANCOM price/sales catalogue (PRICAT) and there after referred to using a GTIN.
If you wish to indicate that promotional details are marked on the package, then this should be indicated in DE 7233 in the PAC segment.
IMD+C++TU::9'
IMD+F++:::CORN CRUNCHIES:CASE'

5. Segments Layout

Segment number: 26

SG16	- C	9999	-	CPS-SG17-SG22
SG22	- C	9999	-	LIN-PIA-IMD-QTY-QVR-DTM-FTX-SG28-SG29
QTY	- C	10	-	Quantity

Function:

To specify a pertinent quantity.

		EDIFACT	GS1	*	Description
C186	QUANTITY DETAILS	M	**M**		
6063	Quantity type code qualifier	M an..3	**M**	*	12 = Despatch quantity 21 = Ordered quantity 46 = Delivered quantity 48 = Received quantity 59 = Number of consumer units in the traded unit 66 = Committed quantity 192 = Free goods quantity 194 = Received and accepted
6060	Quantity	M an..35	**M**		
6411	Measurement unit code	C an..3	**D**		This DE is only used if the current product is of variable quantity.

Segment Notes:

This segment is used to specify any quantities related to the current line item.

Example:
QTY+194:150'

5. Segments Layout

Segment number: 27

SG16	- C	9999 -	CPS-SG17-SG22
SG22	- C	9999 -	LIN-PIA-IMD-QTY-QVR-DTM-FTX-SG28-SG29
QVR	- C	10 -	Quantity variances

Function:

To specify item details relating to quantity variances.

		EDIFACT	GS1	*	Description
C279	QUANTITY DIFFERENCE INFORMATION	C	**R**		
6064	Quantity variance value	M n..15	**M**		Specify the actual variance amount here.
6063	Quantity type code qualifier	C an..3	**R**		12 = Despatch quantity 21 = Ordered quantity 46 = Delivered quantity 195 = Received, not accepted, to be returned 196 = Received, not accepted, to be destroyed
4221	Discrepancy nature identification code	C an..3	**O**		AC = Over-shipped AE = Delivered but not advised AF = Goods delivered damaged AG = Delivered too late BP = Shipment partial - back order to follow CP = Shipment partial - considered complete, no backorder
C960	REASON FOR CHANGE	C	**O**		
4295	Change reason description code	C an..3	**R**		AT = Item not ordered BB = Transport means technical failure BC = Equipment technical failure BE = Goods technical failure BH = Batch number difference BI = Expiry date difference BJ = Item identification code unknown BN = Temperature outside agreed range BO = Delivered but not advised BP = Short shipped IS = Item represents substitution from original order (GS1 Temporary Code) PC = Pack difference PE = Minimum/maximum product durability date unacceptable (GS1 Temporary Code) X36 = Best before date out of chronological order (GS1 Temporary Code)
1131	Code list identification code	C an..17	**O**		
3055	Code list responsible agency code	C an..3	**D**		
4294	Change reason description	C an..35	**O**		

Segment Notes:

This segment is used to specify any variances between what was received and accepted and what was ordered/ shipped.
If the quantity received and/or accepted is less than the quantity expected by the receiver (e.g. damaged goods not accepted), the value of QVR, DE 6064 must be expressed as a negative.
If the quantity received and/or accepted is greater than the quantity expected by the receiver (e.g. overshipped), the value of QVR, DE 6064 must be expressed as a positive.

5. Segments Layout

Segment number: 27

Example:
QVR+40:195+AC'
40 units of the current line item were received but not accepted because they were over shipped. These extra units will be returned to the supplier.

5. Segments Layout

Segment number: 28

SG16	- C	9999	-	CPS-SG17-SG22
SG22	- C	9999	-	LIN-PIA-IMD-QTY-QVR-DTM-FTX-SG28-SG29
DTM	- C	5	-	Date/time/period

Function:

To specify date, and/or time, or period.

		EDIFACT	GS1	*	Description
C507	DATE/TIME/PERIOD	M	**M**		
2005	Date or time or period function code qualifier	M an..3	**M**		61 = Cancel if not delivered by this date 200 = Pick-up/collection date/time of cargo 360 = Sell by date '200, Pick-up/collection date of cargo' - may be used to specify the collection date of goods being returned, and may be used in conjunction with QVR segment DE 6063 qualifier '195, Received not accepted, to be returned'. '61, Cancel if not delivered by this date' - may be used in back-order situations and may be used in conjunction with QVR segment DE 4221 code BP = Shipment partial, back order to follow. '360, Sell by date' - may be used to specify the sell by date of rejected products and may be used in conjunction with QVR segment DE 4295 code PE = minimum/maximum durability date unacceptable.
2380	Date or time or period value	C an..35	**R**		
2379	Date or time or period format code	C an..3	**R**		102 = CCYYMMDD 203 = CCYYMMDDHHMM 718 = CCYYMMDD-CCYYMMDD

Segment Notes:

This segment is used to specify dates related to the current line item.

Example:
DTM+200:20021115:102'

5. Segments Layout

Segment number: 29

SG16	- C	9999	-	CPS-SG17-SG22
SG22	- C	9999	-	LIN-PIA-IMD-QTY-QVR-DTM-FTX-SG28-SG29
FTX	- C	99	-	Free text

Function:

To provide free form or coded text information.

		EDIFACT	GS1	*	Description
4451	Text subject code qualifier	M an..3	**M**		BAP = External link
4453	Free text function code	C an..3	**N**		
C107	TEXT REFERENCE	C	**N**		
4441	Free text value code	M an..17			
1131	Code list identification code	C an..17			
3055	Code list responsible agency code	C an..3			
C108	TEXT LITERAL	C	**C**		
4440	Free text value	M an..512	**M**		External image reference: enter a URL linking to an image of damaged goodsto clarify a reason code. Make sure the receipient of this message is able to link the picture to an appropriate order and line item by the name of the image file. Include the file type extension in the name. Add optional information to indicate the SSCC. The image must be freely accessible for the receiver.
4440	Free text value	C an..512	**O**		Internal Line Item Reference: optionally enter the LIN item identifier that the URL belongs to.
4440	Free text value	C an..512	**O**		Internal SSCC Reference: optionally enter the SSCC the URL belongs to.
4440	Free text value	C an..512	**N**		
4440	Free text value	C an..512	**N**		
3453	Language name code	C an..3	**N**		
4447	Free text format code	C an..3	**N**		

Segment Notes:

5. Segments Layout

Segment number: 30

SG16	- C	9999	-	CPS-SG17-SG22
SG22	- C	9999	-	LIN-PIA-IMD-QTY-QVR-DTM-FTX-SG28-SG29
SG28	- C	10	-	RFF-DTM
RFF	- M	1	-	Reference

Function:

To specify a reference.

		EDIFACT	GS1	*	Description
C506	REFERENCE	M	**M**		
1153	Reference code qualifier	M an..3	**M**		AAK = Despatch advice number AAU = Despatch note number ALO = Receiving advice number CR = Customer reference number ON = Order number (buyer) POR = Purchase order response number PP = Purchase order change number VN = Order number (supplier)
1154	Reference identifier	C an..70	**R**		
1156	Document line identifier	C an..6	**O**		
4000	Reference version identifier	C an..35	**N**		
1060	Revision identifier	C an..6	**N**		

Segment Notes:

This segment is used to specify any references associated with the current line item.

Example:
RFF+AAK:63321'

5. Segments Layout

Segment number: 31

SG16	- C	9999	-	CPS-SG17-SG22
SG22	- C	9999	-	LIN-PIA-IMD-QTY-QVR-DTM-FTX-SG28-SG29
SG28	- C	10	-	RFF-DTM
DTM	- C	1	-	Date/time/period

Function:

To specify date, and/or time, or period.

		EDIFACT	GS1	*	Description
C507	DATE/TIME/PERIOD	M	**M**		
2005	Date or time or period function code qualifier	M an..3	**M**	*	171 = Reference date/time
2380	Date or time or period value	C an..35	**R**		
2379	Date or time or period format code	C an..3	**R**		102 = CCYYMMDD

Segment Notes:

This segment is used to specify dates related to the references given in the previous RFF segment.

Example:
DTM+171:20021115:102'

5. Segments Layout

Segment number: 32

SG16	- C	9999	-	CPS-SG17-SG22
SG22	- C	9999	-	LIN-PIA-IMD-QTY-QVR-DTM-FTX-SG28-SG29
SG29	- C	9999	-	PCI-QTY-QVR-SG31
PCI	- M	1	-	Package identification

Function:

To specify markings and labels on individual packages or physical units.

		EDIFACT	GS1	*	Description
4233	Marking instructions code	C an..3	**O**		17 = Supplier's instructions 39 = Marked with Serial Shipping Container Code (SSCC)
C210	MARKS & LABELS	C	**O**		
7102	Shipping marks description	M an..35	**M**		
7102	Shipping marks description	C an..35	**O**		
7102	Shipping marks description	C an..35	**O**		
7102	Shipping marks description	C an..35	**O**		
7102	Shipping marks description	C an..35	**O**		
7102	Shipping marks description	C an..35	**O**		
7102	Shipping marks description	C an..35	**O**		
7102	Shipping marks description	C an..35	**O**		
7102	Shipping marks description	C an..35	**O**		
7102	Shipping marks description	C an..35	**O**		
8275	Container or package contents indicator code	C an..3	**N**		
C827	TYPE OF MARKING	C	**N**		
7511	Marking type code	M an..3			
1131	Code list identification code	C an..17			
3055	Code list responsible agency code	C an..3			

Segment Notes:

This segment is used to provide markings and labels information relevant to the product identified in the LIN segment.

Example:
PCI+17'

5. Segments Layout

Segment number: 33

SG16	- C	9999	-	CPS-SG17-SG22
SG22	- C	9999	-	LIN-PIA-IMD-QTY-QVR-DTM-FTX-SG28-SG29
SG29	- C	9999	-	PCI-QTY-QVR-SG31
QTY	- C	1	-	Quantity

Function:

To specify a pertinent quantity.

		EDIFACT	GS1	*	Description
C186	QUANTITY DETAILS	M	**M**		
6063	Quantity type code qualifier	M an..3	**M**	*	194 = Received and accepted
6060	Quantity	M an..35	**M**		
6411	Measurement unit code	C an..3	**D**		This DE is only used if the current product is of variable quantity.

Segment Notes:

This segment is used to indicate the quantity of the current line item received and accepted which is contained in the package marked with the Serial Shipping Container Code identified in the following GIN segment.

Example:
QTY+194:45'

5. Segments Layout

Segment number: 34

SG16	- C	9999	-	CPS-SG17-SG22
SG22	- C	9999	-	LIN-PIA-IMD-QTY-QVR-DTM-FTX-SG28-SG29
SG29	- C	9999	-	PCI-QTY-QVR-SG31
QVR	- C	1	-	Quantity variances

Function:

To specify item details relating to quantity variances.

		EDIFACT	GS1	*	Description
C279	QUANTITY DIFFERENCE INFORMATION	C	**R**		
6064	Quantity variance value	M n..15	**M**		Specify the actual variance amount here.
6063	Quantity type code qualifier	C an..3	**R**		12 = Despatch quantity 21 = Ordered quantity 46 = Delivered quantity 195 = Received, not accepted, to be returned 196 = Received, not accepted, to be destroyed
4221	Discrepancy nature identification code	C an..3	**O**		AC = Over-shipped AE = Delivered but not advised AF = Goods delivered damaged AG = Delivered too late BP = Shipment partial - back order to follow CP = Shipment partial - considered complete, no backorder
C960	REASON FOR CHANGE	C	**O**		
4295	Change reason description code	C an..3	**R**		AT = Item not ordered BA = Damaged Goods BN = Temperature outside agreed range BJ = Item identification code unknown BL = Item represents substitution from original order BM = Minimum/maximum product durability date unacceptable PC = Pack difference
1131	Code list identification code	C an..17	**O**		
3055	Code list responsible agency code	C an..3	**D**		
4294	Change reason description	C an..35	**O**		

Segment Notes:

This segment is used to specify quantity variances for the current line item which is contained in the package marked with the Serial Shipping Container Code identified in the following GIN segment.
For negative values (e.g. damaged goods not accepted) the variance must be expressed as negative.
DE 6064 and 6063: These DE's must be used to indicate the quantity not being accepted which is the difference between the despatched (delivered) quantity and the received and accepted quantity.

Example:
QVR+40:195+AC'

5. Segments Layout

Segment number: 35

SG16	- C	9999	-	CPS-SG17-SG22
SG22	- C	9999	-	LIN-PIA-IMD-QTY-QVR-DTM-FTX-SG28-SG29
SG29	- C	9999	-	PCI-QTY-QVR-SG31
SG31	- C	10	-	GIN
GIN	- M	1	-	Goods identity number

Function:

To give specific identification numbers, either as single numbers or ranges.

		EDIFACT	GS1	*	Description
7405	Object identification code qualifier	M an..3	**M**		AW = Serial shipping container code BJ = Serial shipping container code
C208	IDENTITY NUMBER RANGE	M	**M**		
7402	Object identifier	M an..35	**M**		
7402	Object identifier	C an..35	**O**		
C208	IDENTITY NUMBER RANGE	C	**O**		
7402	Object identifier	M an..35	**M**		
7402	Object identifier	C an..35	**O**		
C208	IDENTITY NUMBER RANGE	C	**O**		
7402	Object identifier	M an..35	**M**		
7402	Object identifier	C an..35	**O**		
C208	IDENTITY NUMBER RANGE	C	**O**		
7402	Object identifier	M an..35	**M**		
7402	Object identifier	C an..35	**O**		
C208	IDENTITY NUMBER RANGE	C	**O**		
7402	Object identifier	M an..35	**M**		
7402	Object identifier	C an..35	**O**		

Segment Notes:

This segment is used to provide the Serial Shipping Container Code marked on the packaging of the current line item.
DE C208: If a sequential series of identity numbers is provided (e.g., 1 up to and including 10) only one repetition of the C208 composite is needed with the first repetition of 7402 specifying the numerically smaller identity number (e.g., 1) and the second repetition the larger identity number (e.g., 10). If identity numbers are not sequential and part of a series (e.g., 1, 3, and 10) then a separate C208 and DE 7402 must be used for each identity number.
Within internal applications, users may provide a range of Serial Shipping Container Codes using one repetition of C208 (as described above) by transmitting a 17 digit SSCC and calculating the check digit within the application.
In EANCOM it is recommended to use the Serial Shipping Container Code (SSCC) for unique identification of individual transport packages.

Example:
GIN+AW+354123450000000014'

5. Segments Layout

Segment number: 36

CNT	- C	1 - Control total			
Function: To provide control total.					
		EDIFACT	GS1	*	Description
C270	CONTROL	M	**M**		
6069	Control total type code qualifier	M an..3	**M**	*	2 = Number of line items in message
6066	Control total value	M n..18	**M**		
6411	Measurement unit code	C an..3	**O**		

Segment Notes:

This segment is used to provide message control information for checking on the message receivers in-house system.

Example:
CNT+2:120'

5. Segments Layout

Segment number: 37

UNT - M 1 - Message trailer					
Function: To end and check the completeness of a message. Notes: 1. 0062, the value shall be identical to the value in 0062 in the corresponding UNH segment.					
		EDIFACT	GS1	*	Description
0074	Number of segments in a message	M n..10	**M**		The total number of segments in the message is detailed here.
0062	Message reference number	M an..14	**M**		The message reference numbered detailed here should equal the one specified in the UNH segment.
Segment Notes: This segment is a mandatory UN/EDIFACT segment. It must always be the last segment in the message. Example: UNT+34+ME000001'					

5. Segments Layout

Segment number: 38

UNZ	- M	1 - Interchange trailer

Function:

To end and check the completeness of an interchange.

Notes:
1. 0020, the value shall be identical to the value in 0020 in the corresponding UNB segment.

		EDIFACT	GS1	*	Description
0036	Interchange control count	M n..6	**M**		Number of messages or functional groups within an interchange.
0020	Interchange control reference	M an..14	**M**		Identical to DE 0020 in UNB segment.

Segment Notes:

This segment is used to provide the trailer of an interchange.
DE 0036: If functional groups are used, this is the number of functional groups within the interchange. If functional groups are not used, this is the number of messages within the interchange.
UNZ+5+12345555'

6. Examples

Example 1 - Receiving Advice Confirming Reception and Acceptance of Complete Shipment

EXAMPLE	ORDERED/ CONFIRMED ORDERS/ORDRSP - LIN	DESPATCHED DESADV - LIN Despatch note	RECEIVED AND ACCEPTED RECADV - LIN	VARIANCES/REASONS/ ACTIONS RECADV - QVR
1	100	100	100	-

The following is an example of a Receiving Advice message providing a confirmation of the reception of a shipment. The Receiving Advice is sent by the buyer of goods identified by GLN 5412345000013 to the supplier identified by GLN 5410738100005.

The Receiving Advice with reference REC5488 is sent the 11 March 2002. The goods were received 25 February 2002 in reference to the buyer's Purchase Order number PO12345 dated 20 February 2002 and the supplier's Despatch Advice number DA45601 dated 25 February 2002.

The Receiving Advice confirms the reception and acceptance of the whole shipment. No detailed information on the shipment contents is provided.

UNH+ME000001+RECADV:D:01B:UN:EAN008'	Message header
BGM+632+REC5488+29'	Receiving advice number REC5488
DTM+137:20020311:102'	Message date 11th of March 2002
DTM+50:20020225:102'	Goods receipt date 25th of February 2002
RFF+AAK:DA45601'	Receipt relates to despatch advice number DA45601
DTM+171:20020225:102'	Despatch advice date 25th of February 2002
RFF+ON:PO12345'	Receipt relates to buyer’s order number PO12345
DTM+171:20020220:102'	Order date 20th of February 2002
NAD+BY+5412345000013::9'	Buyer identified by GLN 5412345000013
RFF+VA:1452216'	Buyer’s VAT number 1452216
NAD+SU+5410738100005::9'	Supplier identified by GLN 5410738100005
RFF+VA:5448776'	Supplier’s VAT number 5448776
UNT+13+ME000001'	Total number of segments in the message equals 13

6. Examples

Example 2 - Receiving Advice Message Informing of Damaged Goods

EXAMPLE	ORDERED/ CONFIRMED ORDERS/ORDRSP – LIN	DESPATCHED DESADV - LIN Despatch note	RECEIVED AND ACCEPTED RECADV - LIN	VARIANCES/REASONS/ACTIONS RECADV - QVR
2	100	100	95	- 100 delivered, shipment damaged, quantity difference 5

The following is an example of a Receiving Advice message providing the receiving details for a shipment. The Receiving Advice is sent by the buyer of goods identified by GLN 5412345000013 to the supplier identified by GLN 5410738100005. The Receiving Advice with reference REC5490 is sent the 11 March 2002. The goods were received 10 March 2002 in reference to the buyer's Purchase Order number PO12345 dated 1 March 2002 and the supplier's Despatch Advice number DA45601 dated 10 March 2002.

The trading partners have specified beforehand within the Interchange Agreement what actions will be taken with respect to common occurring discrepancies between received and accepted quantities and quantities ordered/despatched. Both trading partners have agreed and know what actions should be taken in such circumstances. In this scenario, the Receiving Advice message is used as a status report, with the required actions being agreed outside the EDI environment.

The Receiving Advice confirms the receipt and acceptance of 95 units of product 5410738000169 and informs that 100 units were delivered and that 5 units were delivered damaged (The trading partners have agreed that in such a case, the units will be destroyed. This action is agreed beforehand and is not indicated within the Receiving Advice.)

UNH+ME000001+RECADV:D:01B:UN:EAN008'	Message header
BGM+632+REC5490+9'	Receiving advice number REC5490
DTM+137:20020311:102'	Message date 11th of March 2002
DTM+50:20020310:102'	Goods receipt date 10th of March 2002
RFF+AAK:DA45601'	Receipt relates to despatch advice number DA45601
DTM+171:20020310:102'	Despatch advice date 10th of March 2002
RFF+ON:PO12345'	Receipt relates to buyer’s order number PO12345
DTM+171:20020301:102'	Date of order 1st of March 2002
NAD+BY+5412345000013::9'	Buyer identified by GLN 5412345000013
RFF+VA:1452216'	Buyer’s VAT number is 1452216
NAD+SU+5410738100005::9'	Supplier identified by GLN 5410738100005
RFF+VA:5448776'	Supplier’s VAT number 5448776
CPS+1'	Consignment packing sequence 1
LIN+1++5410738000169:SRV'	Received product identified by GTIN 5410738000169
QTY+194:95'	Received and accepted quantity 95
QTY+12:100'	Despatched quantity 100
QVR+-5:196+AF'	Quantity variance of minus 5 (difference between

	received/accepted and despatched quantities) because goods delivered damaged which will be destroyed
UNT+18+ME000001'	Total number of segments in the message equals 18

Example 3 - Receiving Advice Message Informing of Damaged Goods to Be Destroyed

EXAMPLE	ORDERED/ CONFIRMED ORDERS/ORDRSP - LIN	DESPATCHED DESADV - LIN Despatch note	RECEIVED AND ACCEPTED RECADV - LIN	VARIANCES/REASONS/ ACTIONS RECADV - QVR
3	100	100	95	-5 Damaged - destroy

The following is an example of a Receiving Advice message providing the receiving details for a shipment. The Receiving Advice is sent by the buyer of goods identified by GLN 5412345000013 to the supplier identified by GLN 5410738100005.

The Receiving Advice with reference RA000001 is sent the 11 March 2002. The goods were received 10 March 2002 in reference to the buyer's Purchase Order number PO12345 dated 1 March 2002 and the supplier's Despatch Advice number DA45601 dated 10 March 2002.

The Receiving Advice confirms the receipt and acceptance of 95 units of product 5410738000169 and rejects 5 units delivered damaged and which will be destroyed.

UNH+ME000001+RECADV:D:01B:UN:EAN008'	Message header
BGM+632+RA000001+9'	Receiving advice number RA000001
DTM+137:20020311:102'	Message date 11th of March 2002
DTM+50:20020310:102'	Goods received date 10th of March 2002
RFF+AAK:DA45601'	Receipt relates to despatch advice number DA45601
DTM+171:20020310:102'	Despatch advice date 10th of March 2002
RFF+ON:PO12345'	Receipt relates to buyer’s order number PO12345
DTM+171:20020301:102'	Date of order 1st of March 2002
NAD+BY+5412345000013::9'	Buyer identified by GLN 5412345000013
RFF+VA:1452216'	Buyer’s VAT number is 1452216
NAD+SU+5410738100005::9'	Supplier identified by GLN 5410738100005
RFF+VA:5448776'	Supplier’s VAT number 5448776
CPS+1'	Consignment packing sequence 1
LIN+1++5410738000169:SRV'	Received product identified by GTIN 5410738000169

QTY+194:95'	Received and accepted quantity 95
QTY+21:100'	Ordered quantity 100
QVR+-5:196+AF'	Quantity variance of minus 5 (difference between received/accepted and despatched quantities) because goods delivered damaged which will be destroyed
UNT+18+ME000001’	Total number of segments in the message equals 18

Example 4 - Receiving Advice Informing of Damaged Goods to be Destroyed, Back Order Confirmed

EXAMPLE	ORDERED/ CONFIRMED ORDERS/ORDRSP - LIN	DESPATCHED DESADV - LIN Despatch note	RECEIVED AND ACCEPTED RECADV - LIN	VARIANCES/REASONS/ ACTIONS RECADV - QVR
4	100	85	83	-2 Damaged - destroy

The following is an example of a Receiving Advice message providing the receiving details for a shipment. The Receiving Advice is sent by the buyer of goods identified by GLN 5412345000013 to the supplier identified by GLN 5410738100005.

The Receiving Advice with reference RA000001 is sent the 11 March 2002. The goods were received 10 March 2002 in reference to the buyer's Purchase Order number PO12345 dated 1 March 2002 and the supplier's Despatch Advice number DA45601 dated 10 March 2002.

The Receiving Advice confirms the receipt and acceptance of 83 units of product 5410738000169 and rejects 2 units delivered damaged and which will be destroyed. A back order for 15 units was confirmed previous to the despatch of goods.

UNH+ME000001+RECADV:D:01B:UN:EAN008'	Message header
BGM+632+RA000001+9'	Receiving advice number RA000001
DTM+137:20020311:102'	Message date 11th of March 2002
DTM+50:20020310:102'	Goods received date 10th of March 2002
RFF+AAK:DA45601'	Receipt relates to despatch advice number DA45601
DTM+171:20020310:102'	Despatch advice date 10th of March 2002
RFF+ON:PO12345'	Receipt relates to buyer’s order number PO12345
DTM+171:20020301:102'	Date of order 1st of March 2002
NAD+BY+5412345000013::9'	Buyer identified by GLN 5412345000013
RFF+VA:1452216'	Buyer’s VAT number is 1452216
NAD+SU+5410738100005::9'	Supplier identified by GLN 5410738100005
RFF+VA:5448776'	Supplier’s VAT number 5448776

CPS+1'	Consignment packing sequence 1
LIN+1++5410738000169:SRV'	Received product identified by GTIN 5410738000169
QTY+194:83'	Received and accepted quantity 83
QTY+46:85’	Delivered quantity 85
QTY+21:100'	Ordered quantity 100
QVR+-2:196+AF'	First quantity variance of minus 2 (difference between received/accepted and delivered quantities) is because goods delivered damaged which will be destroyed
QVR+-15:83+BP'	Second quantity variance of minus 15 (difference between delivered and ordered quantities) is because of a short delivery for which a back order will follow
UNT+20+ME000001’	Total number of segments in the message equals 20

Example 5 - Receiving Advice Changing Back Order Status

EXAMPLE	ORDERED/ CONFIRMED ORDERS/ORDRSP - LIN	DESPATCHED DESADV - LIN Despatch note	RECEIVED AND ACCEPTED RECADV - LIN	VARIANCES/REASONS/ ACTIONS RECADV - QVR
5	100	85	85	-15 Back ordered

The following is an example of a Receiving Advice message providing the receiving details for a shipment. The Receiving Advice is sent by the buyer of goods identified by GLN 5412345000013 to the supplier identified by GLN 5410738100005.

The Receiving Advice with reference RA000001 is sent the 11 March 2002. The goods were received 10 March 2002 in reference to the buyer's Purchase Order number PO12345 dated 1 March 2002 and the supplier's Despatch Advice number DA45601 dated 10 March 2002.

The Receiving Advice confirms the receipt and acceptance of 85 units of product 5410738000169 and informs that the other 15 units on back order should be cancelled if not delivered by 28 March 2002. The Receiving Advice affects the status of an outstanding order line.

UNH+ME000001+RECADV:D:01B:UN:EAN008'	Message header
BGM+632+RA000001+9'	Receiving advice number RA000001
DTM+137:20020311:102'	Message date 11th of March 2002
DTM+50:20020310:102'	Goods received date 10th of March 2002
RFF+AAK:DA45601'	Receipt relates to despatch advice number DA45601

DTM+171:20020310:102'	Despatch advice date 10th of March 2002
RFF+ON:PO12345'	Receipt relates to buyer’s order number PO12345
DTM+171:20020301:102'	Date of order 1st of March 2002
NAD+BY+5412345000013::9'	Buyer identified by GLN 5412345000013
RFF+VA:1452216'	Buyer’s VAT number is 1452216
NAD+SU+5410738100005::9'	Supplier identified by GLN 5410738100005
RFF+VA:5448776'	Supplier’s VAT number 5448776
CPS+1'	Consignment packing sequence 1
LIN+1++5410738000169:SRV'	Received product identified by GTIN 5410738000169
QTY+194:85'	Received and accepted quantity 85
QTY+21:100'	Ordered quantity 100
QVR+-15:83+BP'	Quantity variance of minus 15 (difference between received/accepted and ordered quantities) for which a back order will follow
DTM+61:20020328:102'	Back order is to be cancelled if not delivered by the 28th of March 2002
UNT+19+ME000001	Total number of segments in the message equals 19

Example 6 - Receiving Advice Rejecting Excess Shipment (Goods Returned)

EXAMPLE	ORDERED/ CONFIRMED ORDERS/ORDRSP - LIN	DESPATCHED DESADV - LIN Despatch note	RECEIVED AND ACCEPTED RECADV - LIN	VARIANCES/REASONS/ ACTIONS RECADV - QVR
6	100	120	100	20 Excess delivery, return

The following is an example of a Receiving Advice message providing the receiving details for a shipment. The Receiving Advice is sent by the buyer of goods identified by GLN 5412345000013 to the supplier identified by GLN 5410738100005.

The Receiving Advice with reference RA000001 is sent the 11 March 2002. The goods were received 10 March 2002 in reference to the buyer's Purchase Order number PO12345 dated 1 March 2002 and the supplier's Despatch Advice number DA45601 dated 10 March 2002.

The Receiving Advice confirms the receipt and acceptance of 100 units of product 5410738000169 and rejects the reception of 20 additional units which were delivered in excess. The excess delivery will be returned to the supplier who will have to collect the goods on 28 March 2002.

UNH+ME000001+RECADV:D:01B:UN:EAN008'	Message header

6. Examples

BGM+632+RA000001+9'	Receiving advice number RA000001
DTM+137:20020311:102'	Message date 11th of March 2002
DTM+50:20020310:102'	Goods received date 10th of March 2002
RFF+AAK:DA45601'	Receipt relates to despatch advice number DA45601
DTM+171:20020310:102'	Despatch advice date 10th of March 2002
RFF+ON:PO12345'	Receipt relates to buyer's order number PO12345
DTM+171:20020301:102'	Date of order 1st of March 2002
NAD+BY+5412345000013::9'	Buyer identified by GLN 5412345000013
RFF+VA:1452216'	Buyer's VAT number is 1452216
NAD+SU+5410738100005::9'	Supplier identified by GLN 5410738100005
RFF+VA:5448776'	Supplier's VAT number 5448776
CPS+1'	Consignment packing sequence 1
LIN+1++5410738000169:SRV'	Received product identified by GTIN 5410738000169
QTY+194:100'	Received and accepted quantity 100
QTY+46:120'	Delivered quantity 120
QTY+21:100'	Ordered quantity 100
QVR+20:195+AC'	Quantity variance of plus 20 are to be returned due to over delivery
DTM+200:20020328:102'	Excess goods should be collected by the 28th of March 2002
UNT+19+ME000001	Total number of segments in the message equals 19

Example 7 - Receiving Advice Informing of Unknown Shipped Goods

EXAMPLE	ORDERED/ CONFIRMED ORDERS/ORDRSP - LIN	DESPATCHED DESADV - LIN Despatch note	RECEIVED AND NOT ACCEPTED RECADV - LIN	VARIANCES/REASONS/ ACTIONS RECADV - QVR
7	100	100	100	Excess delivery, unknown pallet received - return

The following is an example of a Receiving Advice message providing the receiving details for a shipment. The Receiving Advice is sent by the buyer of goods identified by GLN 5412345000013 to the supplier identified by GLN 5410738100005.

The Receiving Advice with reference RA000001 is sent the 11 March 2002. The goods were received 10 March 2002 in reference to the buyer's Purchase Order number PO12345 dated 1 March 2002 and the supplier's Despatch Advice number DA45601 dated 10 March 2002.

The Receiving Advice notifies the supplier of the receipt of 100 units of product 5410738000169 which are unknown (not ordered). These products were delivered on the pallet with the Serial Shipping Container Code 354107380000000019.

UNH+ME000001+RECADV:D:01B:UN:EAN008'	Message header
BGM+352::9+RA000001+9'	Receiving advice number RA000001
DTM+137:20020311:102'	Message date 11th of March 2002
DTM+50:20020310:102'	Goods receipt date 10th of March 2002
RFF+AAK:DA45601'	Receipt relates to despatch advice number DA45601
DTM+171:20020310:102'	Despatch advice date 10th of March 2002
RFF+ON:PO12345'	Receipt relates to buyer’s order number PO12345
DTM+171:20020301:102'	Date of order 1st of March 2002
NAD+BY+5412345000013::9'	Buyer identified by GLN 5412345000013
RFF+VA:1452216'	Buyer’s VAT number is 1452216
NAD+SU+5410738100005::9'	Supplier identified by GLN 5410738100005
RFF+VA:5448776'	Supplier’s VAT number 5448776 delivery
CPS+1'	Consignment packing sequence 1
PAC+1++201::9'	One ISO 1 pallet
PCI+33E'	Pallet marked with Serial Shipping Container Code
GIN+BJ+354107380000000019'	Serial Shipping Container Code 354107380000000019
LIN+1++5410738000169:SRV'	Received product identified by GTIN 5410738000169

6. Examples

QTY+194:0'	Received and accepted quantity 0
QTY+46:100'	Delivered quantity 100
QVR+100:195++AT'	Quantity variance of plus 100 are to be returned due to being never ordered
UNT+21+ME000001	Total number of segments in the message equals 21

Note:
The EDI interchange will include the UNB..UNZ segments and, if applicable, the UNG..UNE segments (see part I, section 5.7).